Cambridge Assessment International Education

Cambridge International AS & A Level

PHYSICS **9702/12**

Paper 1 Multiple Choice **May/June 2021**

1 hour 15 minutes

You must answer on the multiple choice answer sheet.

You will need: Multiple choice answer sheet
Soft clean eraser
Soft pencil (type B or HB is recommended)

INSTRUCTIONS

- There are **forty** questions on this paper. Answer **all** questions.
- For each question there are four possible answers **A**, **B**, **C** and **D**. Choose the **one** you consider correct and record your choice in soft pencil on the multiple choice answer sheet.
- Follow the instructions on the multiple choice answer sheet.
- Write in soft pencil.
- Write your name, centre number and candidate number on the multiple choice answer sheet in the spaces provided unless this has been done for you.
- Do **not** use correction fluid.
- Do **not** write on any bar codes.
- You may use a calculator.

INFORMATION

- The total mark for this paper is 40.
- Each correct answer will score one mark.
- Any rough working should be done on this question paper.

This document has **20** pages. Any blank pages are indicated.

© UCLES 2021

Data

speed of light in free space	$c = 3.00 \times 10^{8}\,\text{m s}^{-1}$
permeability of free space	$\mu_0 = 4\pi \times 10^{-7}\,\text{H m}^{-1}$
permittivity of free space	$\varepsilon_0 = 8.85 \times 10^{-12}\,\text{F m}^{-1}$
	$\left(\frac{1}{4\pi\varepsilon_0} = 8.99 \times 10^{9}\,\text{m F}^{-1}\right)$
elementary charge	$e = 1.60 \times 10^{-19}\,\text{C}$
the Planck constant	$h = 6.63 \times 10^{-34}\,\text{J s}$
unified atomic mass unit	$1\,\text{u} = 1.66 \times 10^{-27}\,\text{kg}$
rest mass of electron	$m_\text{e} = 9.11 \times 10^{-31}\,\text{kg}$
rest mass of proton	$m_\text{p} = 1.67 \times 10^{-27}\,\text{kg}$
molar gas constant	$R = 8.31\,\text{J K}^{-1}\,\text{mol}^{-1}$
the Avogadro constant	$N_\text{A} = 6.02 \times 10^{23}\,\text{mol}^{-1}$
the Boltzmann constant	$k = 1.38 \times 10^{-23}\,\text{J K}^{-1}$
gravitational constant	$G = 6.67 \times 10^{-11}\,\text{N m}^2\,\text{kg}^{-2}$
acceleration of free fall	$g = 9.81\,\text{m s}^{-2}$

© UCLES 2021

Formulae

uniformly accelerated motion	$s = ut + \frac{1}{2}at^2$ $v^2 = u^2 + 2as$
work done on/by a gas	$W = p\Delta V$
gravitational potential	$\phi = -\frac{Gm}{r}$
hydrostatic pressure	$p = \rho gh$
pressure of an ideal gas	$p = \frac{1}{3}\frac{Nm}{V}\langle c^2 \rangle$
simple harmonic motion	$a = -\omega^2 x$
velocity of particle in s.h.m.	$v = v_0 \cos \omega t$ $v = \pm\omega\sqrt{(x_0^2 - x^2)}$
Doppler effect	$f_o = \frac{f_s v}{v \pm v_s}$
electric potential	$V = \frac{Q}{4\pi\varepsilon_0 r}$
capacitors in series	$1/C = 1/C_1 + 1/C_2 + \ldots$
capacitors in parallel	$C = C_1 + C_2 + \ldots$
energy of charged capacitor	$W = \frac{1}{2}QV$
electric current	$I = Anvq$
resistors in series	$R = R_1 + R_2 + \ldots$
resistors in parallel	$1/R = 1/R_1 + 1/R_2 + \ldots$
Hall voltage	$V_H = \frac{BI}{ntq}$
alternating current/voltage	$x = x_0 \sin \omega t$
radioactive decay	$x = x_0 \exp(-\lambda t)$
decay constant	$\lambda = \frac{0.693}{t_{\frac{1}{2}}}$

© UCLES 2021

1 What is **not** a reasonable estimate of the physical property indicated?

A 2×10^3 W for the power dissipated by the heating element of an electric kettle

B 4×10^2 m^3 for the volume of water in a swimming pool

C 5×10^5 N s for the momentum of a lorry moving along a road

D 6×10^2 N for the weight of a fully grown racehorse

2 Which quantity could have units of N m V^{-1}?

A acceleration

B charge

C current

D resistance

3 An object is acted upon by two forces, 10 N in the vertical direction and 6 N at 40° to the vertical, as shown.

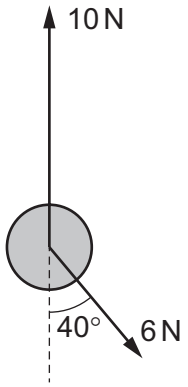

What is the resultant force acting on the object?

A

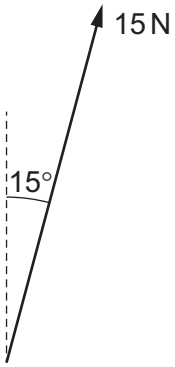

B

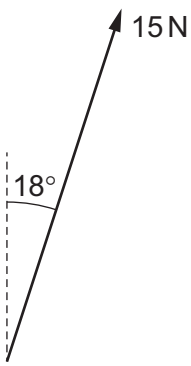

C

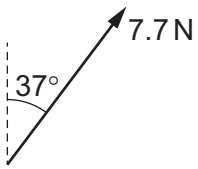

D

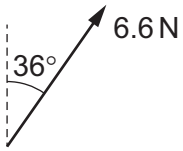

© UCLES 2021

4 An analogue ammeter with a range of 0–250 mA is connected into an electrical circuit. The diagram shows the ammeter's display.

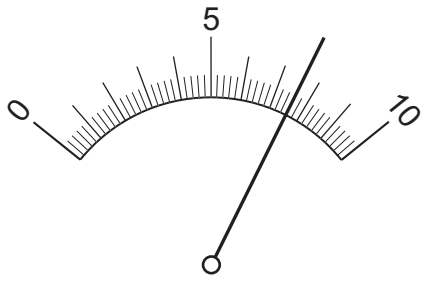

What is the reading on the ammeter?

A 76 mA **B** 165 mA **C** 183 mA **D** 190 mA

5 Students take readings of the volume of a liquid using three different pieces of measuring equipment X, Y and Z.

The true value of the volume of the liquid is *V*.

The students' results are shown.

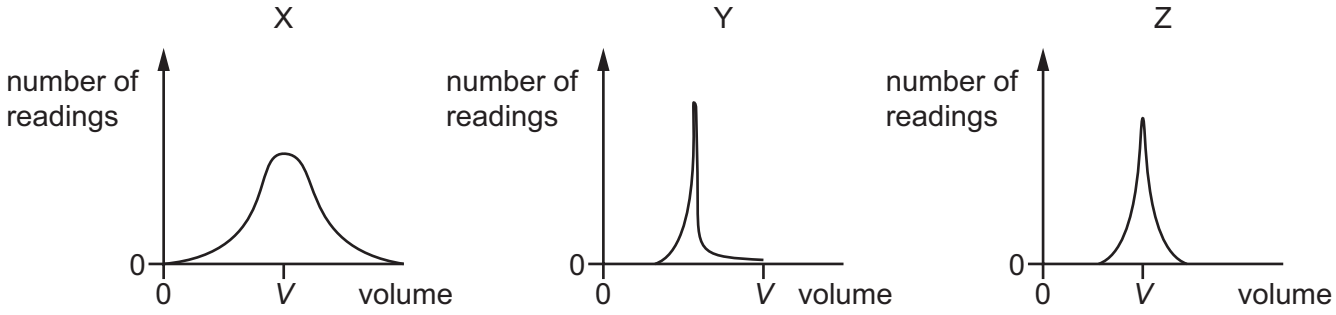

How many pieces of equipment are precise and how many are accurate?

	number of precise pieces of equipment	number of accurate pieces of equipment
A	1	1
B	1	2
C	2	1
D	2	2

6 Which graph shows the variation with time t of the velocity v of an object falling vertically downwards in a vacuum?

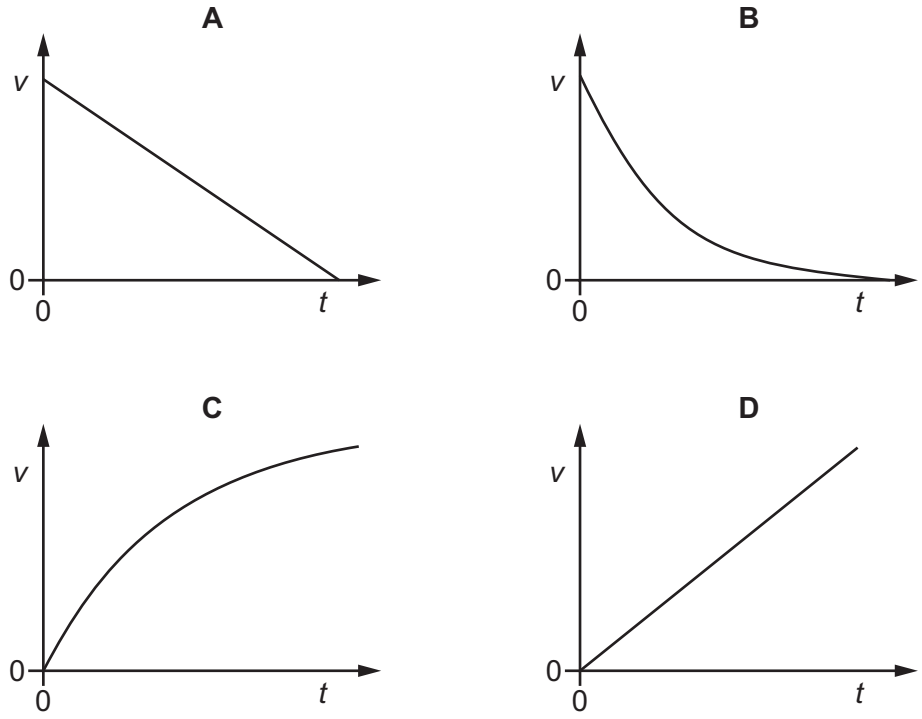

7 A projectile is fired from point P with velocity V at an angle θ to the horizontal. It lands at point Q, a horizontal distance R from P. Air resistance is negligible.

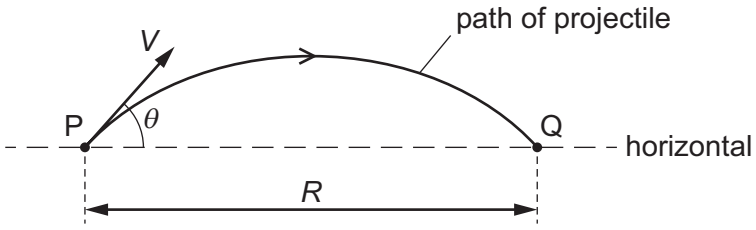

The acceleration of free fall is g.

Which equation for R is correct?

A $R = \dfrac{V^2 \sin\theta \cos\theta}{g}$

B $R = \dfrac{2V^2 \sin\theta \cos\theta}{g}$

C $R = \dfrac{V^2 \sin\theta \cos\theta}{2g}$

D $R = \dfrac{V^2 g \sin\theta \cos\theta}{2}$

© UCLES 2021

8 A book of weight W is at rest on a table. A student attempts to state Newton's third law of motion by saying that 'action equals reaction'.

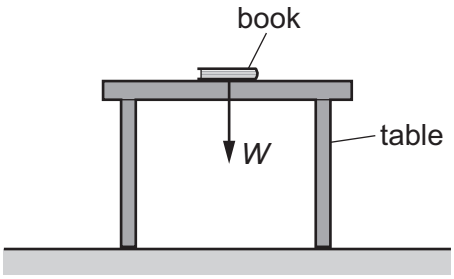

If the weight of the book is the 'action' force, what is the 'reaction' force?

A the force W acting downwards on the Earth from the table

B the force W acting upwards on the book from the table

C the force W acting upwards on the Earth from the book

D the force W acting upwards on the table from the floor

9 Four balls are dropped at the same time from the top of a very tall tower. There is no wind blowing.

Which ball hits the ground first?

A



mass M
diameter D

B



mass $4M$
diameter D

C

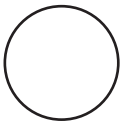

mass M
diameter $2D$

D

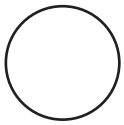

mass $4M$
diameter $2D$

10 A nitrogen molecule P travelling at a speed of $320\,m\,s^{-1}$ in a vacuum collides with a stationary nitrogen molecule Q.

After the collision, P travels at a velocity of $180\,m\,s^{-1}$ at an angle of 55° to its original path.

Q travels in a direction at an angle of 34° to the initial path of P.

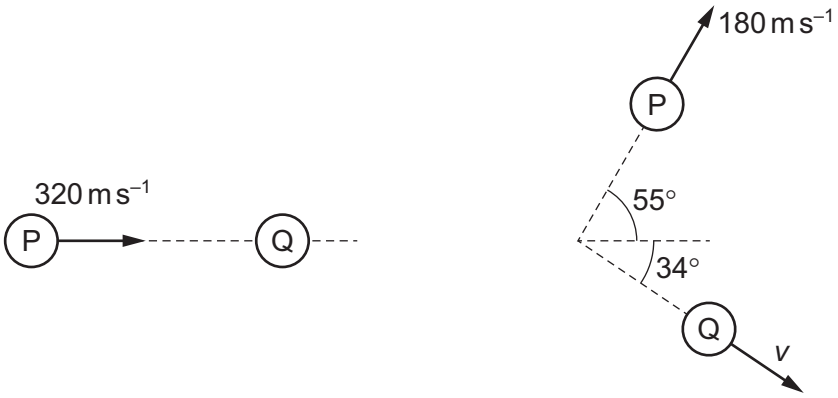

before collision after collision

Assume that there are no external forces acting on the molecules.

What is the magnitude v of the velocity of Q after the collision?

A $120\,m\,s^{-1}$ **B** $140\,m\,s^{-1}$ **C** $180\,m\,s^{-1}$ **D** $260\,m\,s^{-1}$

11 A charged particle is placed in a uniform field of force. The direction of the force on the particle is opposite to the direction of the field.

What is the field and what is the charge on the particle?

	field	charge on particle
A	electric	negative
B	electric	positive
C	gravitational	negative
D	gravitational	positive

© UCLES 2021

12 A disc of radius r is acted upon by two opposite forces, each of magnitude F. The forces form a couple, as shown.

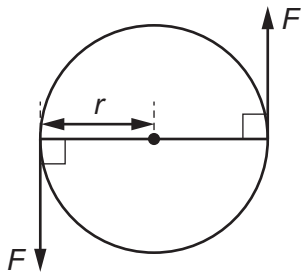

What is the torque of this couple?

A $\frac{1}{2}Fr$ **B** Fr **C** $2Fr$ **D** $4Fr$

13 A uniform square sign of weight 40 N is suspended vertically from its top edge by a horizontal hinge, as shown.

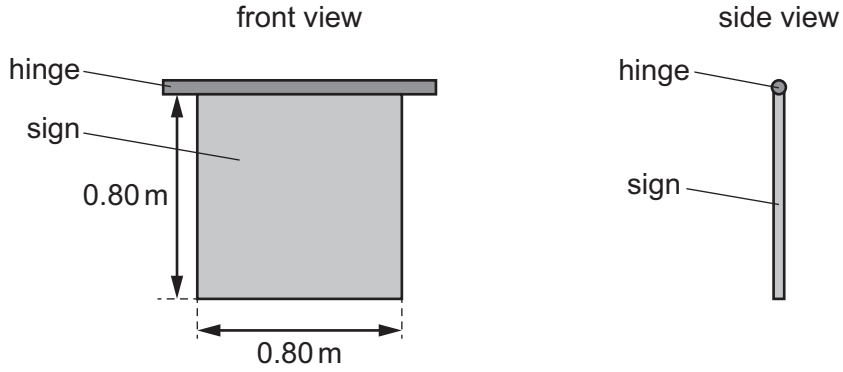

The hinge is not frictionless. When the sign is displaced from the vertical by an external force and then released, it does not return to the vertical position.

The maximum torque exerted by the hinge on the sign is 6.0 N m. The sign is displaced by 90° so that it is horizontal and then gradually released.

At which angle to the vertical does the sign hang after release?

A 11° **B** 22° **C** 68° **D** 79°

14 Each foot of an elephant has a circular cross-section with a circumference of 1.4 m. The elephant has a mass of 5400 kg.

The elephant is standing still with all four feet on the ground. Assume the pressure under each foot is the same.

What is the approximate pressure exerted on the ground by each of the elephant's feet?

A 8.7 kPa **B** 35 kPa **C** 85 kPa **D** 340 kPa

© UCLES 2021

15 A stone is falling vertically through the air at a constant (terminal) velocity.

Which energy change is occurring?

A gravitational potential energy to thermal energy

B gravitational potential energy to kinetic energy of the stone

C kinetic energy to gravitational potential energy of the stone

D kinetic energy of the stone to thermal energy

16 An object of weight 12 N rests on a platform on top of a container with two pistons, as shown. The container contains a fixed mass of gas, and the pistons are free to move.

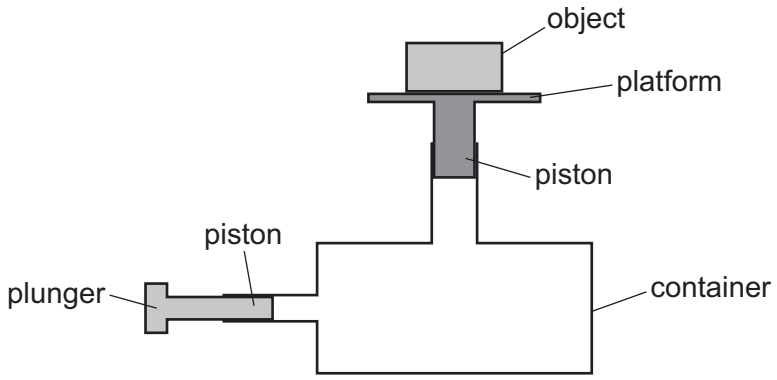

The plunger is slowly pushed 4.0 cm to the right. As a result, the object slowly moves upwards a distance 0.50 cm.

How much work is done on the object?

A 0.060 J **B** 0.48 J **C** 6.0 J **D** 48 J

17 A constant force F, acting on a car of mass m, moves the car up a slope through a distance s at constant velocity v. The angle of the slope to the horizontal is α.

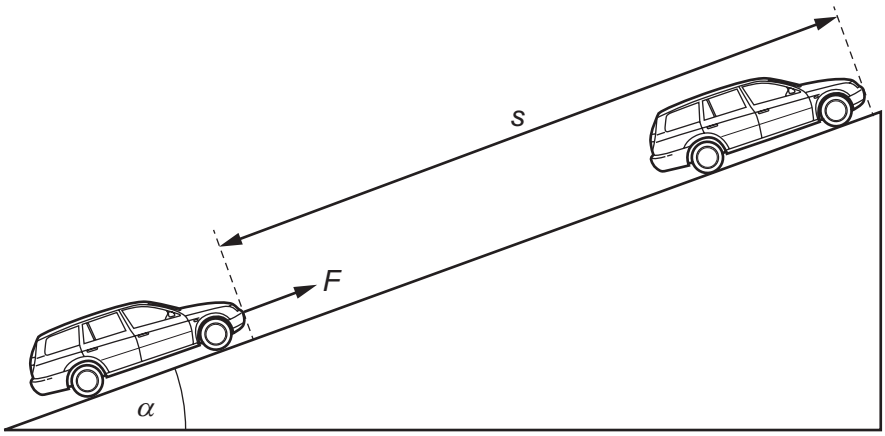

The acceleration of free fall is g.

What is the ratio $\frac{\text{gravitational potential energy gained by car}}{\text{work done by force } F}$?

A $\frac{mgs\sin\alpha}{Fv}$ **B** $\frac{mv}{Fs}$ **C** $\frac{mv^2}{2Fs}$ **D** $\frac{mg\sin\alpha}{F}$

18 What is the definition of power?

A Power is the product of force and velocity.

B Power is the product of force and work done per unit time.

C Power is the product of force per unit time and velocity.

D Power is the rate at which work is done.

19 A steel bar of circular cross-section is under tension T, as shown.

The diameter of the wide portion is double the diameter of the narrow portion.

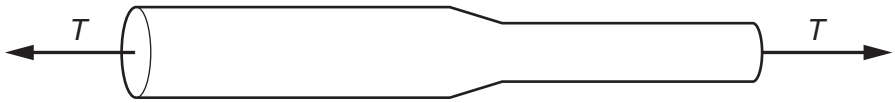

What is the value of $\frac{\text{stress in the wide portion}}{\text{stress in the narrow portion}}$?

A 0.25 **B** 0.50 **C** 2.0 **D** 4.0

20 Two guitar strings are stretched by tensile forces.

String X is stretched by a tensile force F that causes an extension x.

String Y is stretched by a tensile force $2F$ that causes an extension $2x$.

The strings obey Hooke's law.

What is the ratio $\frac{\text{strain energy in stretched string X}}{\text{strain energy in stretched string Y}}$?

A 4 **B** 2 **C** $\frac{1}{2}$ **D** $\frac{1}{4}$

21 Two lasers emit light in a vacuum. One laser emits red light and the other emits green light.

Which property of the light from the two lasers **must** be different?

A amplitude

B frequency

C intensity

D speed

22 Two particles in a progressive wave are a distance 10 cm apart. The two graphs show the variation with time t of the displacement d of the two particles.

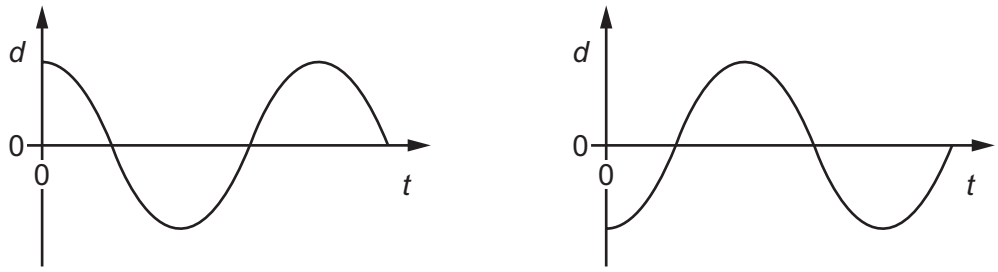

What could be represented by the two graphs?

A particles in a longitudinal wave with a compression and the nearest rarefaction separated by 10 cm

B particles in a longitudinal wave with a compression and the nearest rarefaction separated by 20 cm

C particles in a transverse wave with a peak and the nearest trough separated by 20 cm

D particles in a transverse wave with two adjacent peaks separated by 10 cm

© UCLES 2021

23 A sound wave is detected by a microphone that is connected to a cathode-ray oscilloscope (CRO).

The screen of the CRO displays a waveform, as shown.

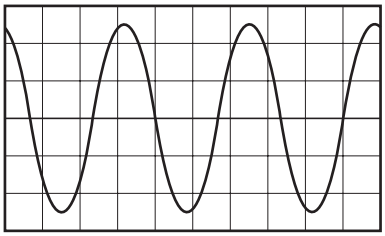

The time-base is set to $20\,\mu s\,div^{-1}$.

What is the frequency of the sound wave?

A 15 Hz **B** 15 000 Hz **C** 20 000 Hz **D** 30 000 Hz

24 A person stands at the side of a straight railway track. A train moves towards the person and emits sound from its whistle. The person hears a sound of frequency 1690 Hz as the train approaches him.

The person then hears sound of frequency 1500 Hz as the train moves away from him. The speed of sound in air is $340\,m\,s^{-1}$.

What is the speed of the train?

A $20\,m\,s^{-1}$ **B** $38\,m\,s^{-1}$ **C** $41\,m\,s^{-1}$ **D** $43\,m\,s^{-1}$

25 Which list shows electromagnetic waves in order of decreasing frequency?

A gamma-rays → infrared → ultraviolet → radio waves

B gamma-rays → ultraviolet → infrared → radio waves

C radio waves → infrared → ultraviolet → gamma-rays

D radio waves → ultraviolet → infrared → gamma-rays

26 A pipe of length L is open at one end and closed at the other end. A loudspeaker is at the open end and emits a sound wave into the pipe.

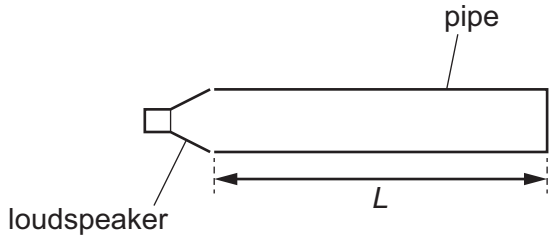

When a stationary wave is formed, there is an antinode at the open end of the pipe.

Which wavelength of sound could be used to produce a stationary wave?

A $\frac{2L}{3}$ **B** L **C** $\frac{4L}{3}$ **D** $2L$

27 Which diagram best shows how water waves diffract when they pass through a gap in a barrier?

A

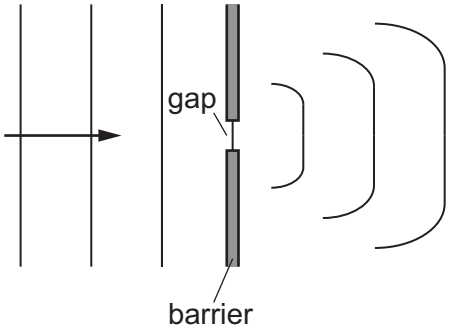

B

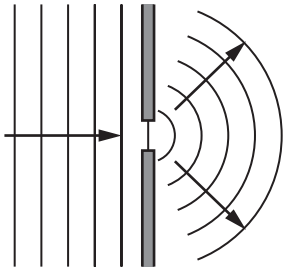

C

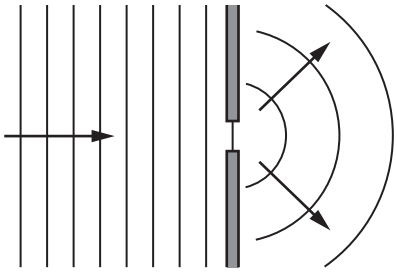

D

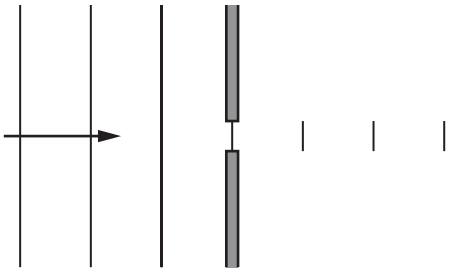

28 In a two-source interference experiment, light of a single frequency is incident on a double slit.

The light waves emerging from the slits are coherent.

What is meant by *coherent*?

A The waves are in phase.

B The waves have a constant phase difference.

C The waves have the same amplitude.

D The waves interfere constructively wherever they overlap.

29 A parallel beam of light consists of light of wavelength 420 nm and light of wavelength 630 nm.

The light is incident normally on a diffraction grating.

The diffraction maxima for the two wavelengths overlap only at an angle of 31° from the direction of the incident light beam.

What could be the line spacing of the diffraction grating?

A 1.2 μm **B** 1.6 μm **C** 2.4 μm **D** 3.7 μm

30 A positively charged particle P is in an electric field, as shown.

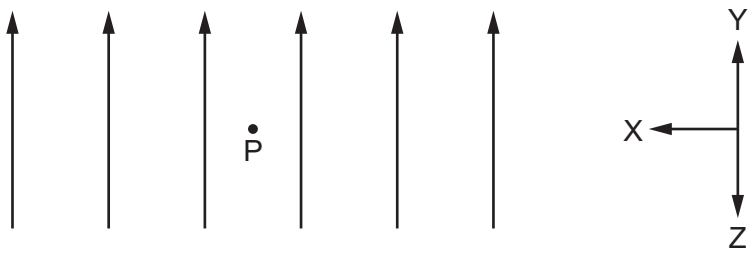

The field lines (lines of force) are evenly spaced and parallel.

Which statement is correct?

A Moving P a small distance in any direction will not change the electric force on P.

B Moving P a small distance in direction Y will increase the electric force on P.

C Moving P a small distance in direction Z will increase the electric force on P.

D Moving P a small distance in direction X will increase the electric force on P.

© UCLES 2021

31 The diagram shows two parallel metal plates P and Q, separated by a distance of 5.0 mm. There is a potential difference of 700 V between the plates. Plate Q is earthed.

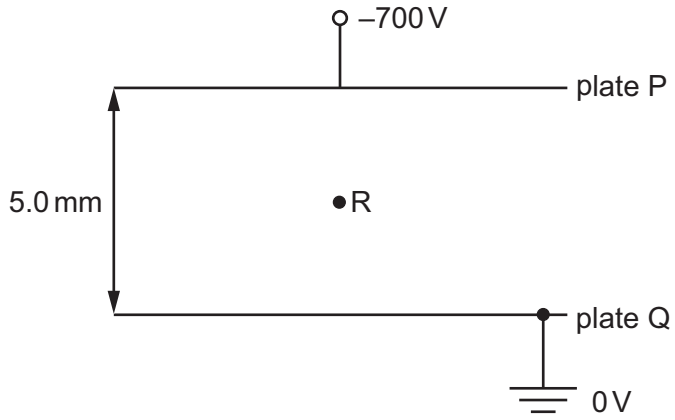

What is the magnitude and direction of the electric field at point R?

A $1.4 \times 10^2\,\text{N C}^{-1}$ from P towards Q

B $1.4 \times 10^2\,\text{N C}^{-1}$ from Q towards P

C $1.4 \times 10^5\,\text{N C}^{-1}$ from P towards Q

D $1.4 \times 10^5\,\text{N C}^{-1}$ from Q towards P

32 A wedge-shaped metal conductor of length *L*, varying width and uniform thickness is connected to a cell, as shown.

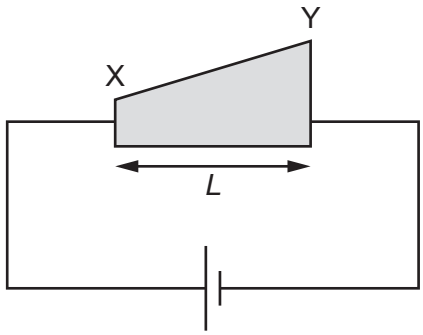

Which graph best shows how the average drift velocity *v* of electrons in the conductor varies with distance *x* from end X?

A

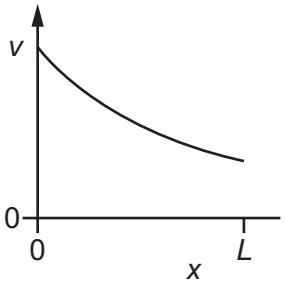

B

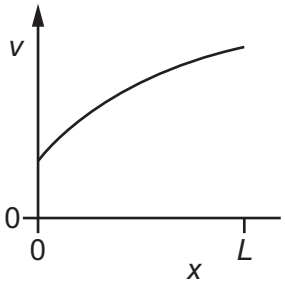

C

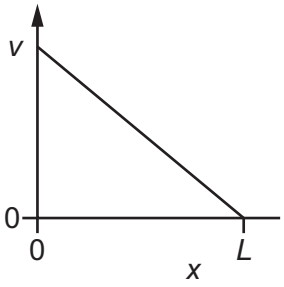

D

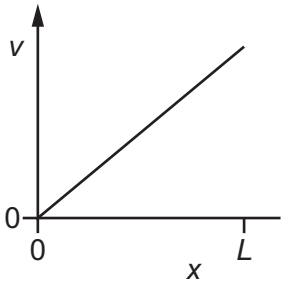

© UCLES 2021

33 The power output of an electrical supply is 2.4 kW at a potential difference (p.d.) of 240 V. The two wires between the supply and a kettle each have a resistance of 0.50 Ω, as shown.

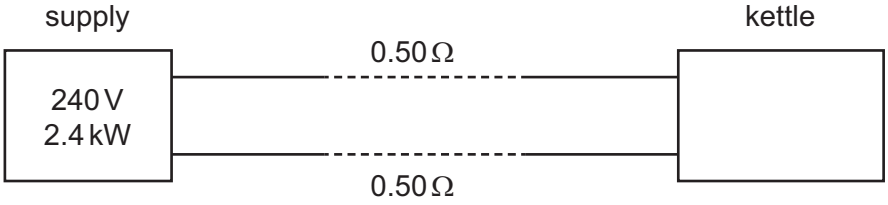

What is the power supplied to the kettle and what is the p.d. across the kettle?

	power / kW	p.d. / V
A	2.3	230
B	2.3	235
C	2.4	230
D	2.4	235

34 The graph shows the variation with potential difference V of the current I in components X, Y and Z.

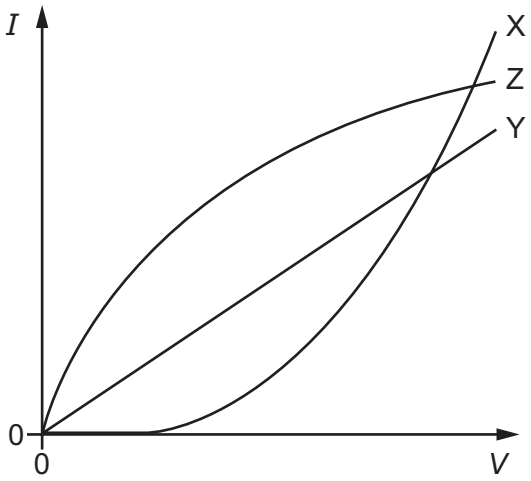

Which row correctly identifies the components?

	metallic conductor at constant temperature	semiconductor diode	filament lamp
A	X	Z	Y
B	Y	X	Z
C	Y	Z	X
D	Z	Y	X

35 A wire of resistance 9.55 Ω has a diameter of 0.280 mm.

It is made of metal of resistivity $4.90 \times 10^{-7}\,\Omega\,\text{m}$.

What is the length of the wire?

A 1.20 m **B** 4.80 m **C** 19.0 m **D** 76.0 m

36 A cell of constant electromotive force (e.m.f.) but with internal resistance is connected to a fixed resistor R using a potentiometer. A voltmeter measures the potential difference (p.d.) between the terminals of the cell.

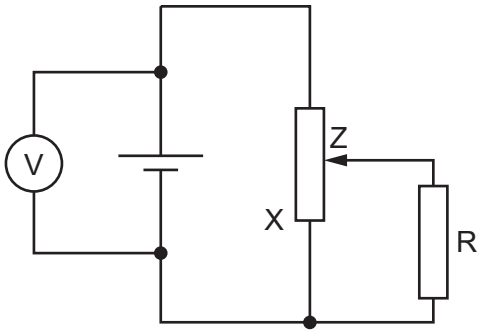

Which statement explains the change to the reading of the voltmeter as contact Z is moved towards end X of the potentiometer?

A The voltmeter reading decreases because the current through the cell decreases.

B The voltmeter reading decreases because the current through the cell increases.

C The voltmeter reading increases because the current through the cell decreases.

D The voltmeter reading increases because the current through the cell increases.

37 A cell of electromotive force (e.m.f.) *E* and negligible internal resistance is connected to a circuit.

The circuit has currents I_1, I_2 and I_3, and potential differences V_1, V_2 and V_3, as shown.

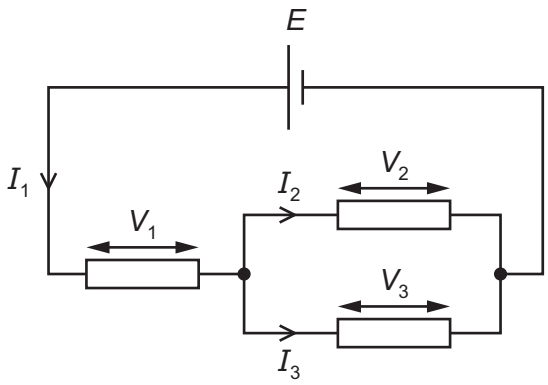

Which equation represents a statement of Kirchhoff's first law?

A $I_1 = I_2 + I_3$ **B** $I_1 = I_2 = I_3$ **C** $E = V_1 + V_2$ **D** $V_1 = V_2 = V_3$

© UCLES 2021

38 Two resistors are connected in series with a 6.0 V power supply, as shown.

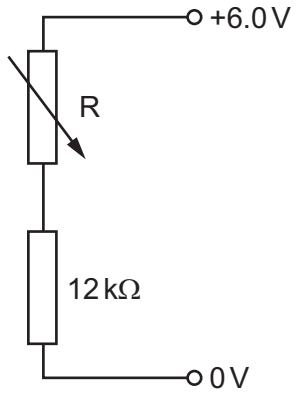

What is the resistance of the variable resistor R to give a potential difference of 1.0 V across the 12 kΩ resistor?

A 2.0 kΩ **B** 10 kΩ **C** 60 kΩ **D** 72 kΩ

39 A nucleus of magnesium decays into a nucleus X by emitting a β^+ particle. The decay is represented by the equation shown.

$$^{23}_{12}\text{Mg} \rightarrow {}^{P}_{Q}\text{X} + {}^{0}_{1}\beta^{+}$$

What are the values of P and Q?

	P	Q
A	22	11
B	22	13
C	23	11
D	23	13

40 In β^- decay, a neutron inside a nucleus changes to a proton.

Which statement describes the quark composition of the nucleus during the decay?

A The number of down quarks decreases by one.

B The number of down quarks increases by one.

C The number of down quarks stays the same.

D The number of up quarks stays the same.

© UCLES 2021

BLANK PAGE

Permission to reproduce items where third-party owned material protected by copyright is included has been sought and cleared where possible. Every reasonable effort has been made by the publisher (UCLES) to trace copyright holders, but if any items requiring clearance have unwittingly been included, the publisher will be pleased to make amends at the earliest possible opportunity.

To avoid the issue of disclosure of answer-related information to candidates, all copyright acknowledgements are reproduced online in the Cambridge Assessment International Education Copyright Acknowledgements Booklet. This is produced for each series of examinations and is freely available to download at www.cambridgeinternational.org after the live examination series.

Cambridge Assessment International Education is part of the Cambridge Assessment Group. Cambridge Assessment is the brand name of the University of Cambridge Local Examinations Syndicate (UCLES), which itself is a department of the University of Cambridge.

© UCLES 2021